REV.	DESCRIPTION	DATE	BY	APP'D.
C	1) WAS ALCTV-2006 2) WAS 2.5 HP	12/2013	R.V.	

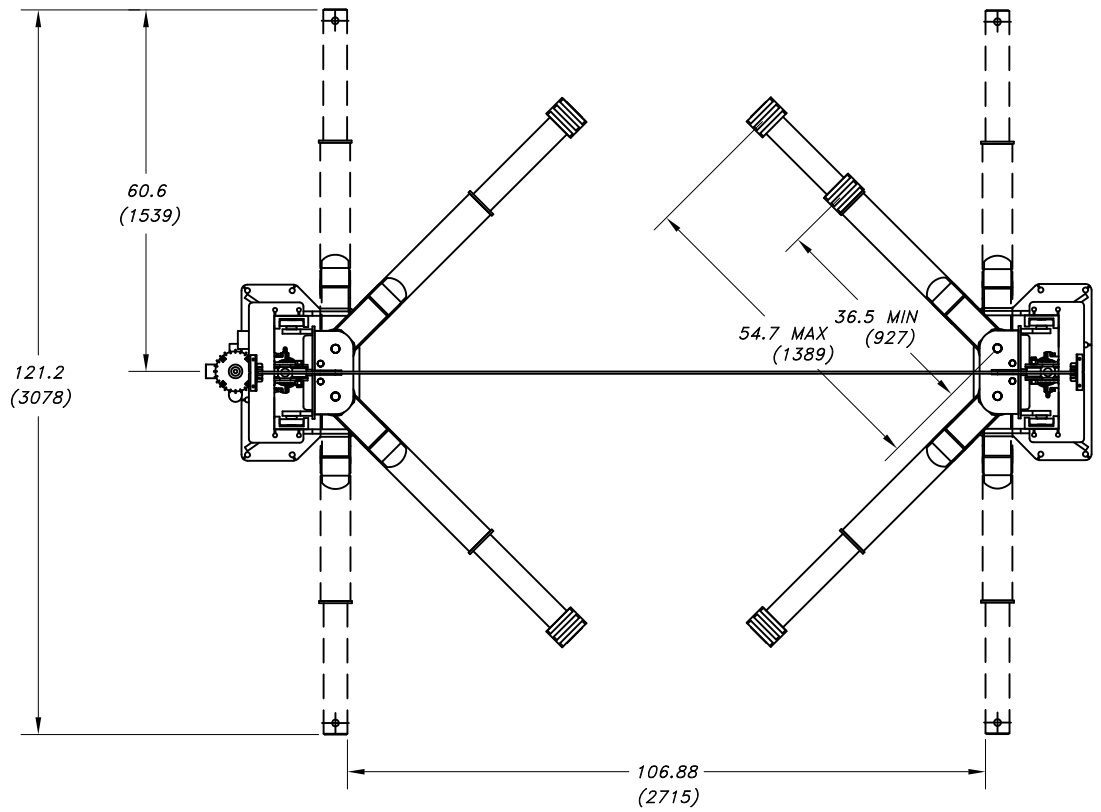

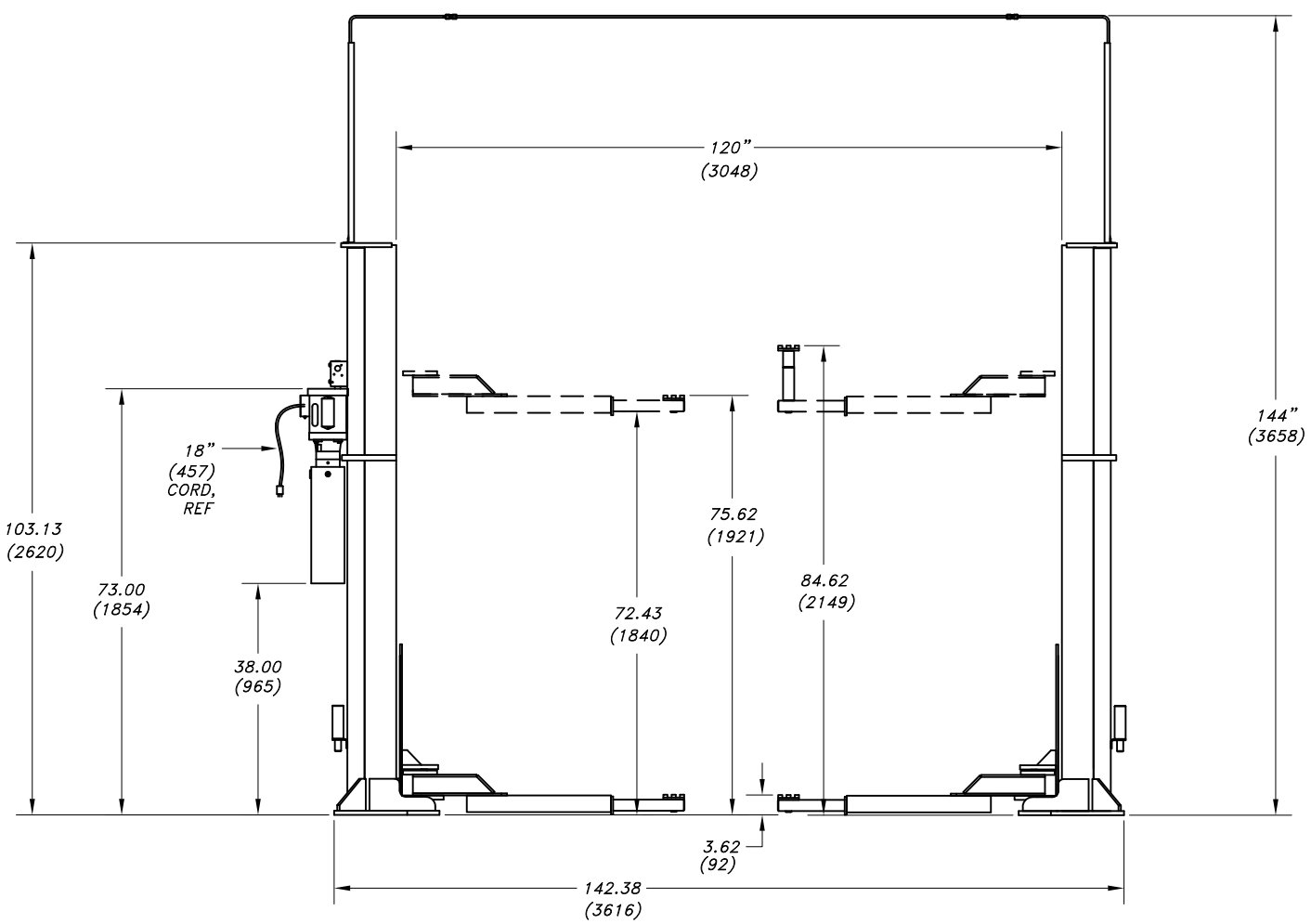

MODEL SYSTEM IA-10

SYMMETRICAL 2-POST LIFT
CAPACITY: 10,000 LBS [4535 kg]

THIS LIFT HAS BEEN TESTED AND CERTIFIED BY A NATIONALLY RECOGNIZED TESTING LABORATORY (NRTL) TO MEET THE REQUIREMENTS OF U.L. STANDARD 201 FOR GARAGE EQUIPMENT AND ANSI/ALI ALCTV-2011 FOR AUTOMOTIVE LIFT CONSTRUCTION.

SPECIFICATIONS:

CAPACITY	10,000 LBS. [4535 kg]
LIFTING SPEED	56 SECONDS
MOTOR RATING	2 HP [1.86 kW], 208-230 VOLTS, SINGLE PHASE, 60 CYCLE (3-PHASE OPTIONAL)
SYNCHRONIZATION	HYDRAULIC FLUID DISPLACEMENT USING NO CHAINS, CABLES, OR OVERHEAD OBSTRUCTIONS
ARM PAD HEIGHT	3 5/8" (92) MINIMUM
LIFTING HEIGHT (STROKE)	6'-0" (1829)
ARM HEIGHT @ FULL RISE	6'-3 5/8" (1921)
MAXIMUM PAD HEIGHT WITH ADAPTORS	7'-0 5/8" (2149)
OVERALL WIDTH	11'-10 3/8" (3616)
WIDTH BETWEEN POSTS	10'-0" (3048)
WIDTH BETWEEN LIFTING ARMS	8'-10 7/8" (2715)
COLUMN HEIGHT	8'-7 1/8" (2619)
OVERHEAD HYDRAULIC LINE HEIGHT	12'-0" (3658) STANDARD (ADJUSTABLE)
WEIGHT	2500 LBS. [1133 kg]
CONCRETE FLOOR REQUIREMENTS	4000 PSI [27.6 MPa], 4 1/2" (114) MINIMUM DEPTH
ANCHORING SYSTEM	(16 total) 3/4" (19) X 5" (127) WEJ-IT BOLTS
MECHANICAL SAFETY LOCKS	AUTOMATIC, ALL POSITION, STARTING @ 5" (127) OFF THE FLOOR
MECHANICAL SAFETY RELEASE	MANUAL @ BOTH COLUMNS
HYDRAULIC SAFETY SYSTEM	AUTOMATIC, ALL POSITION
SWING ARM RESTRAINTS	AUTOMATIC, LOCKING UPON ASCENT
CYLINDERS	TWO (2), ONE (1) PER COLUMN
DRIVE SYSTEM	#646 LEAF CHAIN ROUTED OVER CYLINDER NEEDLE BEARINGS WITH HARDENED OUTER RACE
3" (76) FRAME ADAPTORS (STACKABLE)	FOUR (4) INCLUDED AS STANDARD EQUIPMENT
6" (152) FRAME ADAPTORS (STACKABLE)	FOUR (4) INCLUDED AS STANDARD EQUIPMENT
STEEL CARRIAGE BEARINGS	EIGHT (8) PER CARRIAGE, DOUBLE SEALED, SELF-LUBRICATING
FLOOR ACCESS BETWEEN POSTS	CLEAR AND UNOBSTRUCTED

MOHAWK RESOURCES LTD.
P.O. BOX 110
65 VROOMAN AVENUE
AMSTERDAM, NY 12010
PHN: (800) 833-2006
IN NY: (518) 842-1431
FAX: (518) 842-1289

UNITS = INCH (mm)
= POUND [kg]

NOTE: MOHAWK RESOURCES, LTD. RESERVES THE RIGHT TO MAKE CHANGES WITHOUT NOTICE.

NOTICE OF CONFIDENTIAL INFORMATION

INFORMATION CONTAINED HEREIN IS CONFIDENTIAL AND PROPERTY OF MOHAWK RESOURCES LTD.. WHERE DRAWING IS FURNISHED TO OTHERS IT SHALL BE USED SOLELY FOR PURPOSES OF INSPECTION, INSTALLATION, OR MAINTENANCE. THE INFORMATION SHALL NOT BE USED OR DISCLOSED BY THE RECIPIENT FOR ANY OTHER PURPOSES WHATSOEVER.

NOTES:
1. REMOVE ALL SHARP CORNERS & EDGES.
2. UNLESS OTHERWISE SPECIFIED, SURFACE FINISH TO BE 125 RMS.
3. WELDING MEDIUM SHALL CONFORM TO AWS SPECIFICATIONS TO E-70XX ELECTRODES OR E-70TI CODE 5.3 FLUX CORE WIRE ONLY.

TOLERANCES:
ANGULAR ± 1°
FRACTIONAL ± .030
DECIMAL:
0.XX ± .030
0.XXX ± .005

FILE NAME SYS-IA-10

NEXT ASSEMBLY

SCALE	DRAWN	MOHAWK RESOURCES LTD.
1/16	dak	
CHECKED	APPROVED	TITLE ILLUSTRATION & SPECS, SYSTEM IA-10
DATE 1/05	WEIGHT LB.	FROM / DRAWING NUMBER SYS-IA-10

C

D-SIZE